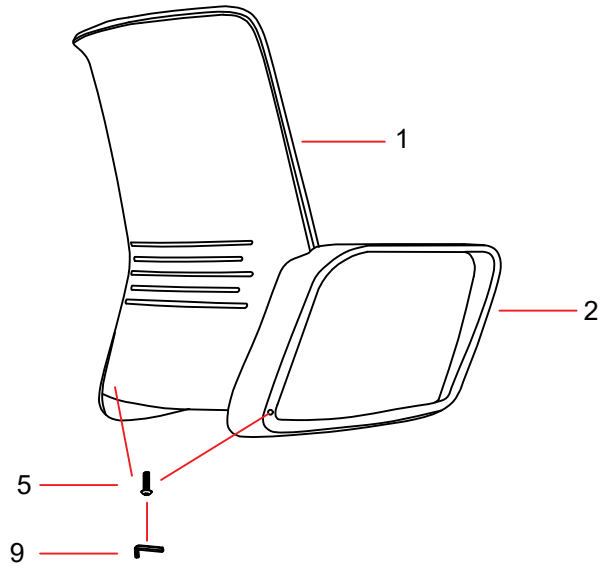

Step 1

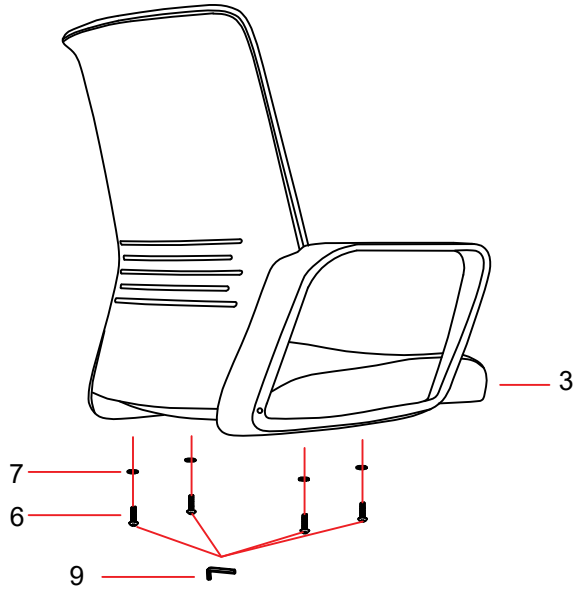

Step 2

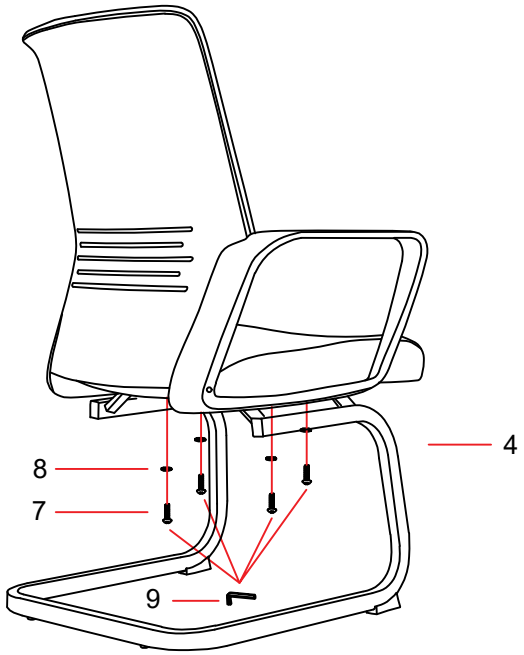

Step 3

	NO.	1	2	3	4	5	6	7	8	9	10	11	12	13	14	15	16	17	18
6221D-1	SKETCH																		
	SIZE					M6X20MM	M6X30MM	M8X22MM	M8X17MM	M5									
	QTY	1pcs	2pcs	1pcs	1pcs	2pcs	8pcs	4pcs	4pcs	1pcs									